Risistance-type centralized thin oil lubrication system

抵抗式集中稀油润滑系统

抵抗式集中稀油润滑系统概述
Description of the Risistance-type centralized thin oil lubricating system

抵抗式润滑系统由抵抗式注油机、过滤器、 BB/BV/BE/BA 等直通式分油块、比例接头、铜接头、油管等组成。可按各个润滑点油量不同，选择不同规格的比例接头。有注油机定时定量的供应润滑油，通过比例接头控制油量对各个润滑点进行润滑，使整个系统各点的供油量与各点需油量保持平衡。

The risistance–type lubricating system is composed of oil injector, filter, BB/VB/BE/BA and other through–type oil distribution block, proportional joint, copper joint and oil pipe etc. Based on different oil volume of the lubricating points, proportional joints of different specifications are selected. The oil injector supplies lubricant at specified time and at specified quantity, and the proportional valve is used to control lubricating points to make oil quantity of supply and need at each of the lubricating points in the whole system balanced

BAOTN® 始于 2006 年

1 系统特点：

- 可稳定地将润滑油输送到每个润滑点。
- 具有止逆功能，可防止润滑油回流。
- 出油量会因油品、压力、温度变化而产生变化。

System characteristics:

- Convey the lubricant to each lubricating point stably.
- The check function is enabled to prevent back flow of lubricant.
- The delivered oil volume is changed due to changes of oil variety, pressure and temperature.

2 系统配置注意事项：

- 在抵抗式润滑系统中，一组比例接头只能对应一个润滑点，比例接头输出油后严禁再进行多点分流。
- 在整个抵抗式润滑系统中，必须每个润滑点都安装比例接头，严禁有个别润滑点不通过比例接头，进行直通式润滑。这样会使管路压力失衡，导致用比例接头的润滑点无法正常供油。因为比例接头具有开启阻力和单向止逆阻力。
- 比例接头严禁有串联使用现象。

Notices for system configurations:

- Of the resistant lubricating system, a set of proportion joint matches one lubricating point, and multi–point diversion is not permitted after oil is delivered by the proportional joint.
- Of the entire resistant lubricating system, each lubricating point must be installed with a proportion joint, and lubricating points directly lubricated without proportional joint are not allowed, which may cause imbalance in the pipeline pressure and failure of oil supply through the lubricating point using the proportional joint, for the proportional joint has opening resistance and one–way check resistance.
- The proportional joint cannot be used in series connection.

3 系统安装注意事项：

- 各连接油管口裁剪平整，确保连接完好不漏油，否则货导致管路无法聚压，使分配器无法正常出油。
- 安装时保证各管路内部清洁。
- 请用正常洁净新润滑油，最佳适用粘度32cSt~250cSt。
- 适用温度–10~50℃
- 注意使用环境变化，适当调整使用油品粘度，建议在15℃以下时用R32#，30℃以上用R68#。
- 比例接头的出油方向不可装反

Attentions for installation of the system:

- The connecting oil pipe shall be cut in order to ensure that oil will not leak. Otherwise, the pipeline accumulate pressure and the distributor cannot deliver oil as usual.
- When installed, interior of the pipeline shall be clean.
- Please use new lubricant for cleaning, and the optimum applicable viscosity is 32cST~250cST.
- Applicable temperature –10~50℃.
- Please notice changes of environment, and adjust oil viscosity, R32# for temperature below 15℃, and R68# for temperature above 30℃.
- Oil delivery of the proportional joint cannot be installed reversely.

4 基本适用范围

- 活塞泵类：适用于注油管路长在5米内，高3米内，润滑点在30个点以内的中小型机械设备。
- 齿轮泵类（间歇型）：适用于主油管长在10米内、高8米内，润滑点在50个点以内，润滑点较多的各类机械设备。
- 齿轮泵类（连续型）：适用于主油管长在15米内、高8米内，润滑点在100个点以内，润滑点较多的各类机械设备。

Basic scope of application:

- Piston pump: applicable for medium and small–sized machinery with oil injection pipeline of maximum 5 meters, height of 3 meters and lubricating points of maximum 30 points.
- Gear pump types (intermittent): applicable for various kinds of machinery with main oil pipeline of maximum 10 meters, height of maximum 8 meters and lubricating points of maximum 50 points.
- The gear pump types (continuous): applicable for various machinery and equipment with main oil pipe of maximum 15 meters, height of 8 meters and lubricating points of maximum 100 points.

BSA/BSB/BSC 型(Type)

稀油比例接头 Thin oil proportional joint

BSA 型(Model)　BSB 型(Model)　BSC 型(Model)

工作原理图 Schematic diagram

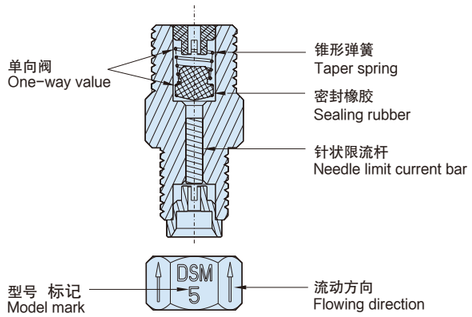

产品外形尺寸图
Product dimension figure

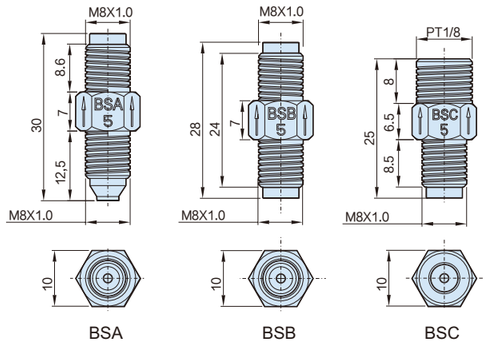

BSA　BSB　BSC

装配示意图 Assembly diagram

备注：以上比例接头，进出油口管径均为Φ 4.
Remarks: the above proportional joints and oil inlet and outlet port diameters are ϕ4.

规格型号及技术参数
Specifications, models and technical parameters

	型号规格 Models and specifications	标记 Marks	流量系数 Flow Coefficient	联接方式 Connecting mode
BSA	BSA–0	BSA 0	1.8	进油口方向与 CZA 连接体连接。出油口方向与 (套管 JQC–BB04) 和 (螺帽 JQC–BP04) 连接。(常用于支路前端) The oil inlet is connected to the CZA connector.The oil outlet is connected to screw cap JQC–BP04 with the sleeve pipe (sleeve pipe JQC–BB04).
	BSA–1	BSA 1	3.8	
	BSA–2	BSA 2	6	
	BSA–3	BSA 3	12	
	BSA–4	BSA 4	18	
	BSA–5	BSA 5	22	
	备注：比例接头流量测试值 (参考油品为 46#) Remarks: such as joint flow testing value (oil product for reference is 46#)			

■ 抵抗式稀油计量件 Resistant thin oil measurement device

规格型号及技术参数
Specifications, models and technical parameters

	型号规格 Models and specifications	标记 Marks	流量系数 Flow Coefficient	联接方式 Connecting mode
BSB	BSB–0	BSB 0	1.8	两端分别与 (套管 JQC–BB04) 和 (螺帽 JQC–BP04) 连接。(常用于支路中端) Both ends are connected to sleeve pipe JQC–BB04 and screw cap JQC–BP04 (usually usedat middle end of the branch).
	BSB–1	BSB 1	3.8	
	BSB–2	BSB 2	6	
	BSB–3	BSB 3	12	
	BSB–4	BSB 4	18	
	BSB–5	BSB 5	22	

	型号规格 Models and specifications	标记 Marks	流量系数 Flow Coefficient	联接方式 Connecting mode
BSC	BSC–0	BSC 0	1.8	进油口方向与 (套管 JQC–BB04) 和 (螺帽 JQC–BP04) 连接出油口端与设备润滑点连接。(常用于支路末端) The oil inlet is connected to sleeve pipeJQC–BB04 and screw cap JQC–BP04.The oil outletis connected to equipment lubricating point(usually used at the end of the branch).
	BSC–1	BSC 1	3.8	
	BSC–2	BSC 2	6	
	BSC–3	BSC 3	12	
	BSC–4	BSC 4	18	
	BSC–5	BSC 5	22	

性能与特点 Performance and characteristics

- BSA/BSB/BSC型抵抗式计量件又称比例接头
- 管式结构，内设有限流杆和单向阀。
- 开启压力：0.2MPa
- 通过节流原理控制流量，按流通能力(流量定数)对流量进行比例分配。同型号计量件在润滑系统中相互间距离的远、近、高、低、卧装或立装均在实际使用中其出油量基本相等。使用寿命长，比例接头单向阀其橡胶密封件外部衬压铜套(除密封面外)防止橡胶密封件膨胀和老化。
- 动作灵敏，排油畅通;比例接头单向阀采用锥形弹簧，确保计量件动作敏与排油畅通，并防止排出的油剂逆流。
- 流量比：同一型号的流量在实际使用过程中会由环境温度的变化和油的粘度不同而发生变化。
- BSA/BSB/BSC resistant measurement device is called proportional joint.
- Pipe structure: built–in flow limit bar and one–way valve.
- Opening pressure: 0.2MPa
- Flow is controlled by the principle of throttling, and distributed according to flowing capacity (flow constant). Meanwhile, the measurement device in the lubricating system with near, distant, high, low, horizontal or vertical installation have identical outlet flow. With long service life, the rubber sealing parts of the proportional one–way joint is coated with copper sleeve (except sealing face) to prevent expansion and aging of rubber sealing parts.
- Sensitive action and smooth oil drain: taper spring is used for one–way valve with proportional joint to ensure that action of the measurement device is sensitive and smooth to prevent reverse flow of oil.
- Flow ratio: flow of the same model shall be changed with change of environmental temperature and oil viscosity in use.

BSD 型(Type)

稀油抵抗式分配器 Thin oil risistance-type dispenser assembly

■ 分配器组件 Dispenser assembly

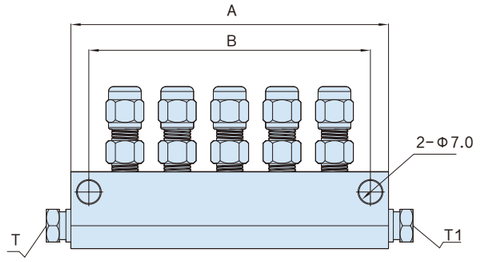

订货编制说明
Order description

BSD □ □ - □ - □ □

出入油口数 Number of inlets and outlets

04	4个 Each
05	5个 Each
06	6个 Each
07	7个 Each

注:出入油口数可定做(4~12个)
Note: The number of inlet and outlet ports can be customized (4~12 Each)

入油口接管直径 Inlet port diameter

1	φ4
2	Tφ4， T1φ6
3	φ6

入油口数 Number of oil inlets

空白 Blank	双入油口 Double oil inlet
D	单入油口 single inlet

入油口类型 Inlet type

空白 Blank	不另设接头 No additional connector
H	双入油口 ,T1 端配直角接头 Double oil inlet, right angle joint at T1 end
D	单入油口 single oil inlet
H	单入油口 ,T1 端配直角接头 single oil inlet, right angle joint at T1 end

出油口配比例接头号数 Oil outlet proportional fitting number

0	0 号比例接头 Proportional joint number 0
1	1 号比例接头 Proportional joint number 1
2	2 号比例接头 Proportional joint number 2
3	3 号比例接头 Proportional joint number 3
4	4 号比例接头 Proportional joint number 4
5	5 号比例接头 Proportional joint number 5

型式 Model	T/T1	出口数 Quantities of outlets	A	B
BSD041	φ4/φ4	2	48	35
BSD042	φ4/φ6			
BSD043	φ6/φ6			
BSD051	φ4/φ4	3	64	51
BSD052	φ4/φ6			
BSD053	φ6/φ6			
BSD061	φ4/φ4	4	80	67
BSD062	φ4/φ6			
BSD063	φ6/φ6			
BSD071	φ4/φ4	5	96	83
BSD072	φ4/φ6			
BSD073	φ6/φ6			

型式 Model	T/T1	出口数 Quantities of outlets	A	B
BSD081	φ4/φ4	6	112	99
BSD082	φ4/φ6			
BSD083	φ6/φ6			
BSD091	φ4/φ4	7	128	115
BSD092	φ4/φ6			
BSD093	φ6/φ6			
BSD101	φ4/φ4	8	144	131
BSD102	φ4/φ6			
BSD103	φ6/φ6			
BSD121	φ4/φ4	10	176	165
BSD122	φ4/φ6			
BSD123	φ6/φ6			

BEA 型(Type)

BAOTN® 始于 2006 年

自动活塞式润滑泵 Automatic piston lubricating pump

■ 自动稀油润滑泵 (活塞泵) Automatic thin oil lubricating pump (piston pump)

BEA-615-262
(树脂油箱 Resin oil tank)

订货编制说明 Order description

BEA-□ □-□ □ □

吐出量 Throughout

6	3-6ml/cy

间歇润滑时间 Intermittent Lubricating time

10	10 分钟 Minute
15	15 分钟 Minute
30	30 分钟 Minute
60	60 分钟 Minute
120	120 分钟 Minute
240	240 分钟 Minute
360	360 分钟 Minute

液位开关 Liquid level switch

空白 Blank	下通电 Lower power supply
D	上通电 Upper power supply
W	无液位开关 Liquid level switch unavailable

出油口管径 Outlet pipe diameter

4	接Φ4管 Connected to Φ4pipe
6	接Φ6管 Connected to Φ6pipe

电机类型 Motor type

1	单相 110V Single phase 110V
2	单相 220V Single phase 220V

BEA-615-262
(树脂油箱 Resin oil tank)

性能与特点

- 此自动活塞式润滑泵，设有液位开关，可将液位异常信号输出。
- 间歇时间在出厂时，可依靠客户的要求设定。
- 吐出油量有两种规格，可在3-6cc范围内调整。
- 机械定时，无需PLC控制，由不同转速的同步电机连续运转，驱动内部涡轮蜗杆减速，确定供油与间歇周期。
- 注意：调试时需手动供油，将手动拉杆至上极限脱手，活塞自行复位，即一次供油完毕。严禁用手按压手动拉杆强制排油，以免损坏泵内部件。
- 在抵抗式系统中无脱压阀装置，需配合比例接头分配器使用 (参考21~23页)

Performance and characteristics

- The automatic piston lubricating pump is provided with liquid level switch to output abnormal liquid level signal.
- The intermittent time shall be set according to customers' requirements when delivered.
- There are two specifications for throughout capacities, adjustable within the range of 3-6cc.
- Timing of the machinery is free of PLC control, and operated by synchronous motor of different rotation speed. Worm shaft is located inside for reduction to ensure the oil supply and intermittent cycle.
- Notes: Manual oil supply is required in commissioning, Pull the manual bar to the upper limit position, and then hands off. The piston will recovered automatically. In this way, oil supply is supplied timely. Draining the oil by pressing the manual pull rod with the hands is prohibited to avoid damaging internal parts.
- There is no pressure relief valve device in the resistance system, and it needs to be used with a proportional joint distributor (refer to page 21~23)

规格型号及技术参数 Specifications, models and technical parameters

项目Item / 型号规格 Models and specifications	电机Motor 电压 voltage (V)	电机Motor 功率 Power (W)	(液位开关) (Liquid level switch) 输出接点容量 Output contact Capacity (A)	间歇时间 Intermittent time (M)	最大输出压力 Maximum output pressure (MPa)	吐出量 Throughout (CC/CY)	出油管径 Outlet oil pipe diameter	液位开关 Liquid level switch	油箱容量 Oil tank volume (L)	重量 Weight (KG)
BEA	AC110 or AC220	4.5	0.3	10	0.3	3 ~ 6 (油量可调) (Adjustable oil)	Φ 4 or Φ 6		2L 树脂油箱 Resin oil tank	1.65
				15						
				30						
				60						
				120						
				240						
				360						

BEB 型(Type)

手拉式润滑泵 Hand-pull lubricating pump

■手动稀油润滑泵（活塞泵）Manual thin oil lubricating pump (piston pump)

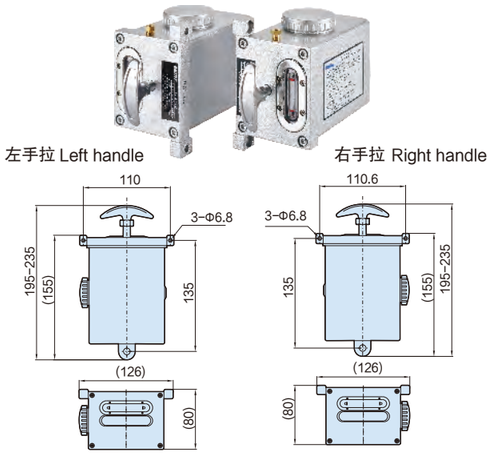

订货编制说明 Order description

BEB - □ □ □ □

吐出量 Throughout	
8	8 mL/cy

手柄方向 Handle direction	
L	左手拉 Left handle
R	右手拉 Right handle

出油口方向 Oil outlet direction	
S	上出口 Upper Export
X	下出口 Below Export

出油口管径 Oil Outlet pipe diameter	
4	接Φ4管 Connected to Φ4pipe
6	接Φ6管 Connected to Φ6pipe

性能与特点 Performance and characteristics

- 体积小，安装方便、使用简易。附止逆装置避免油回流。适用于对油量要求不严格的润滑场所。 适用于润滑系统较简单的机械。油品粘度：20~150cst
- Small volume, easy installation and convenient use. Check device is used to prevent back flow. It is applicable for sites with non-rigorous requirements and machinery with simple lubricating system. Oil product viscosity: 20~150cst.

规格型号及技术参数 Specifications, models and technical parameters

型号规格 Models and specifications / 项目 Item	最大吐出压力 Maximum throughput pressure (MPa)	吐出量 Throughput volume (cc/cy)	出油口管径 Oil outlet pipe diameter	手柄形式 Handle form	油箱容量 Oil tank volume (CC)	出油口方向 Oil outlet direction	重量 Weight (KG)
BEB-8L	0.5	8	Φ 4 or Φ 6	左手拉 Left handle	600	向上或向下 Upward or downward	0.9
BEB-8R				右手拉 Right handle			

BEC 型(Type)

手摇式润滑泵 Hand-operated lubricating pump

■手动稀油润滑泵（活塞泵）Manual thin oil lubricating pump (piston pump)

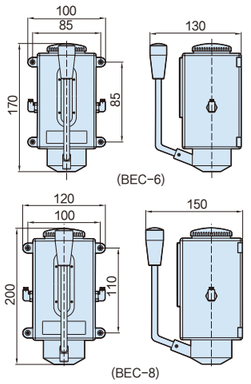

订货编制说明 Order description

BEC - □ □ □

吐出量 Throughout	
8	8 mL/cy

出油口管径 Oil Outlet pipe diameter	
4	接Φ4管 Connected to Φ4pipe
6	接Φ6管 Connected to Φ6pipe

出油口方向 Oil outlet direction	
L	左 Left
R	右 Right

性能与特点 Performance and characteristics

- 体积小，安装方便、使用简易。附止逆装置避免油回流。适用于对油量要求不严格的润滑场所。 适用于润滑系统较简单的机械。油品粘度：20~150cst
- Small volume, easy installation and convenient use. Check device is used to prevent back flow. It is applicable for sites with non-rigorous requirements and machinery with simple lubricating system. Oil product viscosity: 20~150cst.

规格型号及技术参数 Specifications, models and technical parameters

型号规格 Models and specifications / 项目 Item	最大吐出压力 Maximum throughput pressure (MPa)	吐出量 Throughput volume (cc/cy)	出油口管径 Oil outlet pipe diameter	手柄形式 Handle form	油箱容量 Oil tank volume (CC)	出油口方向 Oil outlet direction	重量 Weight (KG)
BEC-6	1.5	8	Φ 4 or Φ 6	左或右 Left or Right	600	向上或向下 Upward or downward	0.9
BEC-8							

BED 型(Type)

BAOTN® 始于 2006 年

手压式润滑泵 Hand-compression lubricating pump

■手动稀油润滑泵（活塞泵）Manual thin oil lubricating pump (piston pump)

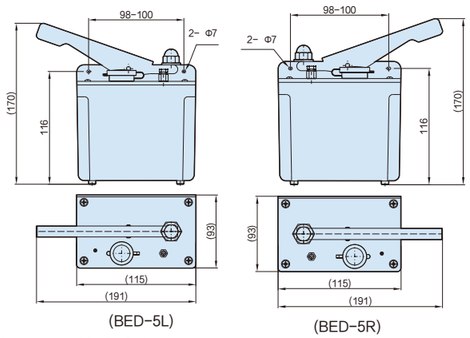

订货编制说明 Order description

BED- □ □ □

吐出量 Throughout	
5	3-5 mL/cy

出油口管径 Oil Outlet pipe diameter	
4	接Φ4管 Connected to Φ4pipe
6	接Φ6管 Connected to Φ6pipe

出油口方向 Oil outlet direction	
L	左手压 Left hand pressurization
R	右手压 Right hand pressurization

性能与特点 Performance and characteristics

- 该泵是活塞泵，压下手柄时将油吸入活塞腔内，手柄复位时，在弹簧力的作用下将活塞管内的油排出，该泵可与抵抗式分配器组成集中润滑系统，适用于注油管路长5米、高3米、15个润滑点以内的各项润滑设备。
- The pump is a piston pump. When the handle is pressed down, the oil is sucked into piston cavity. When the handle is recovered, with the function of the spring force, oil in the piston pipe is drained. The pump can form a centralized lubricating system by combining with the resistant distributor, and is applicable for lubricating with length of 15m, height of 3m and with 15 lubricating points.

规格型号及技术参数 Specifications, models and technical parameters

型号规格 Models and specifications / 项目 Item	最大吐出压力 Maximum throughput pressure (MPa)	吐出量 Throughput volume (cc/cy)	出油口管径 Oil outlet pipe diameter	手柄形式 Handle form	油箱容量 Oil tank volume (CC)	重量 Weight (KG)
BED-5L	0.4	3 ~ 5 (油量可调) (Adjustable oil)	Φ 4 or Φ 6	左手压 Left hand pressurization	500	0.7
BED-5R				右手压 Right hand pressurization		

备注：以安装孔为基准面确定方向，手柄在左为“左手压”，反之为“右手压”。
Notes: Determine the direction with the mounting hole as the reference surface. The handle is"left hand pressure" on the left and "right hand pressure" on the left.

BEE 型(Type)

电磁泵浦 Electromagnetic pump

非标品
Non-standard products

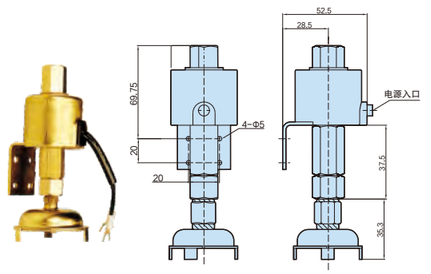

功能 Functions

- 依电磁感应原理作动作，电力损耗低。
- 体积小，占用空间少。
- 可连续使用作润滑或冷却功能。
- 机械性高，可反搭配流量调整阀，调节流量。(吐出流量会因出油管长度及油品黏度而改变)
- 适用於小型加工机械(如：车床、床、铣床、磨床……)气动黄油注油器。
- Acting based on electromagnetic induction principle with low power consumption
- Small volume, fewer occupation
- Used continuously as cooling or lubricating functions
- High mechanic performance, with the flow adjustment valve to adjust valve (ejection flow may be changed by length of outflow pipe length and oil viscosity)
- Applicable for small-sized processing machinery (such as: lathe, machine tool, mill and grinder) pneumatic butter injector

规格型号及技术参数 Specifications, models and technical parameters

型式 Model	功率(W) voltage	电压(单相) voltage 1-phase	吸力(M)	吐出压力 kgf/cm² Ejection pressure	吐出量(l/h) Ejection Capacity		功能 Functions
					68cSt	150cSt	
BEE	25	110V or 220V	1-1.5	1	24	12	流量固定 Constant flow

BTA-A1 型(Type)

数显稀油润滑泵 Thin oil lubricating pump with digital display

订货编制说明 Order description

BTA-A1□□-□□□□□

压力开关 Pressure switch

P	压力开关 Pressure switch
空白 Blank	无 None

油箱容积 Oil tank volume

2	2L
3	3L
4	4L
6	6L
8	8L

电机类型 Motor type

1	单相 110V Single phase 110V
2	单相 220V Single phase 220V

油箱 Oil tank

空白 Blank	树脂油箱 Resin oil tank
A	金属油箱不带回油装置 Metal oil tank without oil return device
H	金属油箱带回油装置 Metal oil tank with oil return device

液位开关 Liquid level switch

W	无液位开关 Liquid level switch unavailable
空白 Blank	有液位开关 Liquid level switch available

出油口管径 Outlet pipe diameter

4	接Φ4管 Connected to Φ4pipe
6	接Φ6管 Connected to Φ6pipe

吐出量 Throughout

2	200cc/min

性能与特点

- 系统可设定三种动作模式。
  a、润滑：开机时先执行润滑时间计时。
  b、间歇：润滑完成后执行间歇时间计时(时间单位可转换)。
  c、记忆：断电后再次送电可继续执行之前未完成的间歇时间。
- 润滑时间和间歇时间均可调整。（内设有锁键功能，可锁定设置后的润滑和间歇时间）
- 设有液位开关、压力开关（可选配）。当油量或压力不足时蜂鸣器会发出报警、并将异常信号输出。
  a、压力不足显示Erp。
  b、液位不足显示Ero。
- 系统时间可设定，"LUB"润滑时间：1–999（秒）
  "INT"间歇时间：1–999（分）(特殊要求可定制)
- 面板指示灯可显示出注油机的润滑和间歇状态。
- 系统可使用"RST"键,强制润滑或消除异常报警信号。
- 单次最长润滑时间≤2min,间歇时间通常为润滑时间的5倍以上。
- 电机设有自我保护功能，防止电机温度过高及过载。
- 在抵抗式系统中无脱压装置，需配合比例接头分配器使用(参考21~23页)。
- 设有溢流阀，可保护注油机及管路由于压力过高而损坏。

Performance and characteristics

- The system is configured with 3 action modes.
  a.Lubricating: when turning on, execute lubricating timing.
  b.Intermittent: execute intermittent timing after lubricating is completed(Time unit convertible).
  c.Memory: in case of power on after power off, resume incomplete intermittent time.
- Lubricating time and intermittent time can be adjusted. (Built–in locking function, and lubricating and intermittent time after setting is locked).
- Provided with liquid level switch and pressure switch (optional). When oil volume or pressure is insufficient, the beeper makes sound, send alarm and offers abnormal signal output.
  a.When pressure is insufficient, Erp is displayed.
  b.When liquid level is insufficient, Ero is displayed.
- The system time can be configured, LUB lubricating time: 1–999 (seconds)
  INT intermittent time: 1–999 (minutes) (Tailored if specially required)
- The panel indicator displays lubricating and intermittent status.
- The system uses RST key to force lubricating or eliminate abnormal reporting signal.
- Single maximum lubricating time≤2 min, and intermittent time is at least 5 times of the lubricating time.
- The motor is provided with self–protection function to avoid high motor temperature and overload.
- No decompression device is provided with resistance–type system, used with proportional joint distributor (Refer to page 21~23).
- Overflow is provided to protect oil injector and pipeline from being damaged by high pressure.

规格型号及技术参数 Specifications, models and technical parameters

项目Item / 型号规格 Models and specifications	电机Motor 电压 voltage (V)	电机Motor 功率 Power (W)	润滑时间 Lubricating time (S)	间歇时间 Intermittent time (M)	额定压力 Rated pressure (MPa)	最大输出压力 Maximum output pressure (MPa)	吐出量 Throughout (cc/min)	出油管径 Outlet oil pipe diameter	压力开关 Pressure Switch	液位开关 Liquid level switch	蜂鸣器 Beeper	油箱容量 Oil tank volume (L)	重量 Weight (KG)
BTA–A1	AC110 or AC220	20	1–999		1.0	2.5	200	Φ 4 or Φ 6	可选配 Optional	有 Yes	有 Yes	2(树脂 Resin)	2.90
												3(树脂 Resin)	3.20
												4(树脂 Resin)	3.30
												4 (钣金 Metal plate)	5.70
												6 (钣金 Metal plate)	6.00
												8 (钣金 Metal plate)	6.50

■ 间歇型电动稀油润滑泵（齿轮泵）Intermittent electric thin oil lubricating pump (gear pump)

BTA–A12
(树脂油箱 Resin oil tank)

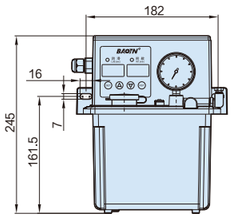

BTA–A13
(树脂油箱 Resin oil tank)

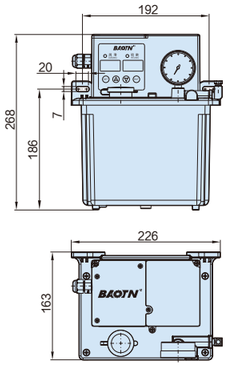

BTA–A14
(树脂油箱 Resin oil tank)

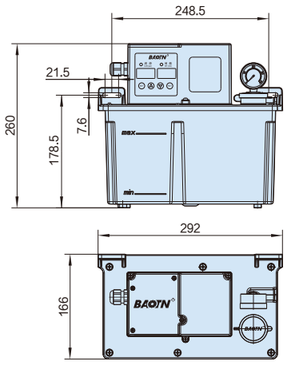

BTA–A14
(钣金油箱 Sheet metal oil tank)

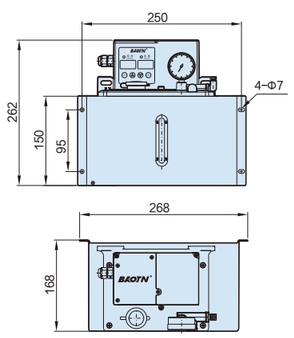

BTA–A16
(钣金油箱 Sheet metal oil tank)

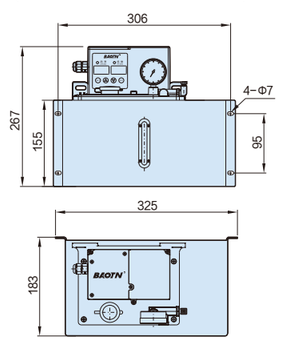

BTA–A18
(钣金油箱 Sheet metal oil tank)

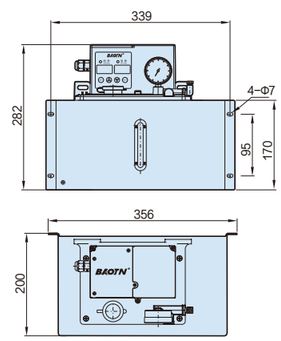

BTA-C1 型(Type)

PLC 控制稀油润滑泵 PLC control thin oil lubricating pump

订货编制说明 Order description

BTA-C1 □ □ – □ □ □ □ □

压力开关 Pressure switch

P	压力开关 Pressure switch
空白 Blank	无 None

油箱容积 Oil tank volume

2	2L
3	3L
4	4L
6	6L
8	8L

电机类型 Motor type

1	单相 110V Single phase 110V
2	单相 220V Single phase 220V

油箱 Oil tank

空白 Blank	树脂油箱 Resin oil tank
A	金属油箱不带回油装置 Metal oil tank without oil return device
H	金属油箱带回油装置 Metal oil tank with oil return device

液位开关 Liquid level switch

D	上通电 Upper power supply
空白 Blank	下通电 Lower power supply

出油口管径 Outlet pipe diameter

4	接Φ4管 Connected to Φ4pipe
6	接Φ6管 Connected to Φ6pipe

吐出量 Throughout

2	200cc/min

性能与特点

- 设有液位开关、压力开关 (可选配)。当油量或压力不足时可将异常信号输出。
- 面板指示灯可显示出注油机的通电和润滑状态。
- 系统中设有"FEED"键，可强制润滑。
- 时间设定：单次最长润滑时间≤2min，间歇时间通常为润滑时间的5倍以上。
- 电机设有自我保护功能，防止电机温度过高及过载。
- 抵抗式系统中无脱压装置，需配合比例接头分配器使用 (参考21~23页)。
- 设有溢流阀，可保护注油机及管路由于压力过高而损坏。
- 内部配有保险丝防止短路导致电流过大烧坏IC板和电机。

Performance and characteristics

- Liquid level switch and pressure switch (optional) are provided. When oil volume or pressure is insufficient, abnormal signal is output.
- The panel indicator light indicates power and lubrication status of the oil injection mold.
- The system is provided with FEED key, and compulsory lubrication is applied.
- Time setting: single maximum lubrication duration≤2min, and the intermittent time is at least 5 times of the lubricating time.
- The motor is provided with self-protection to prevent high temperature and overload of motor.
- No decompression device is provided with resistance-type system, used with proportional joint distributor (Refer to page 21~23).
- Overflow valve is provided to prevent damage by oil injector and pipeline.
- Internal fuse is provided to prevent IC board and motor damaged by short circuit.

规格型号及技术参数 Specifications, models and technical parameters

型号规格 Models and specifications / 项目Item	电机Motor 电压 voltage (V)	电机Motor 功率 Power (W)	润滑时间 Lubricating time (S)	间歇时间 Intermittent time (M)	额定压力 Rated pressure (MPa)	最大输出压力 Maximum output pressure (MPa)	吐出量 Throughout (cc/min)	出油管径 Outlet oil pipe diameter	压力开关 Pressure Switch	液位开关 Liquid level switch	蜂鸣器 Beeper	油箱容量 Oil tank volume (L)	重量 Weight (KG)
BTA-C1	AC110 or AC220	20	由外部 PLC 控制 Controlled by an external PLC		1.0	2.5	200	Φ 4 or Φ 6	可选配 Optional	上通电或下通电 Power supply at upper or lower position	无 No	2(树脂 Resin)	2.90
												3(树脂 Resin)	3.20
												4(树脂 Resin)	3.30
												4 (钣金 Metal plate)	5.70
												6 (钣金 Metal plate)	6.00
												8 (钣金 Metal plate)	6.50

BAOTN 始于 2006 年

■ 间歇型电动稀油润滑泵 (齿轮泵) Intermittent electric thin oil lubricating pump (gear pump)

BTA-C12
(树脂油箱 Resin oil tank)

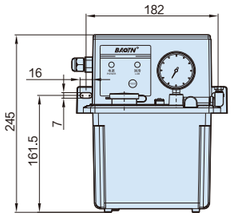

BTA-C13
(树脂油箱 Resin oil tank)

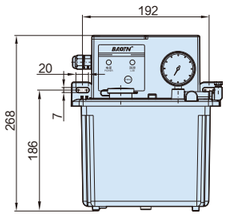

BTA-C14
(树脂油箱 Resin oil tank)

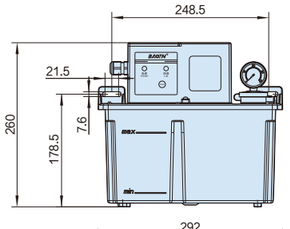

BTA-C14
(钣金油箱 Sheet metal oil tank)

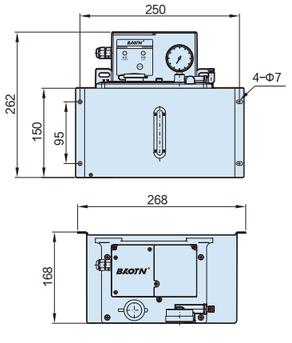

BTA-C16
(钣金油箱 Sheet metal oil tank)

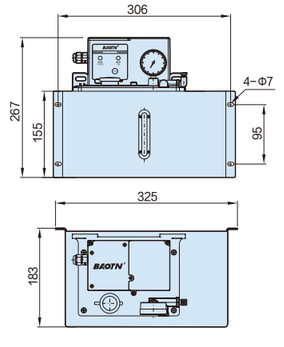

BTA-C18
(钣金油箱 Sheet metal oil tank)

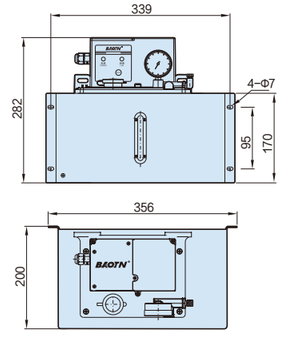

BTB-A1型(Type)

数显稀油润滑泵 Thin oil lubricating pump with digital display

订货编制说明 Order description

BTB−A1□□−□□□□□

压力开关 Pressure switch

P	压力开关 Pressure switch
空白 Blank	无 None

油箱容积 Oil tank volume

3	3L
4	4L
6	6L
8	8L

电机类型 Motor type

1	单相 1−phase 110V
2	单相 1−phase 220V
9	DC24V

吐出量 Throughout

2	200cc/min
3	300cc/min

油箱 Oil tank

空白 Blank	树脂油箱 Resin oil tank
A	金属油箱不带回油装置 Metal oil tank without oil return device
H	金属油箱带回油装置 Metal oil tank with oil return device

液位开关 Liquid level switch

W	无液位开关 Liquid level switch unavailable
空白 Blank	有液位开关 Liquid level switch available

出油口管径 Outlet pipe diameter

4	接Φ4管 Connected to Φ4pipe
6	接Φ6管 Connected to Φ6pipe

性能与特点

- 系统可设定三种动作模式。
  a、润滑：开机时先执行润滑时间计时。
  b、间歇：润滑完成后执行间歇时间计时(时间单位可转换)。
  c、记忆：断电后再次送电可继续执行之前未完成的间歇时间。
- 润滑时间和间歇时间均可调整。(内设有锁键功能，可锁定设置后的润滑和间歇时间)
- 设有液位开关、压力开关(可选配)。当油量或压力不足时蜂鸣器会发出报警、并将异常信号输出。
  a、压力不足显示Erp。
  b、液位不足显示Ero。
- 系统时间可设定，"LUB"润滑时间：1−999 (秒)
  "INT"间歇时间：1−999 (分)
  (特殊要求可定制)
- 面板指示灯可显示出注油机的润滑和间歇状态。
- 系统可使用"RST"键,强制润滑或消除异常报警信号。
- 电机可连续运转。
- 抵抗式系统中无阻压装置，需配合比例接头分配器使用(参考21~23页)。
- 设有溢流阀，可保护注油机及管路由于压力过高而损坏。

Performance and characteristics

- The system is configured with 3 action modes.
  a、Lubricating: when turning on, execute lubricating timing.
  b、Intermittent: execute intermittent timing after lubricating is completed(time unit converted).
  c、Memory: in case of power on after power off, resume incomplete intermittent time.
- Lubricating time and intermittent time can be adjusted. (Built−in locking function, and lubricating and intermittent time after setting is locked).
- Provided with liquid level switch and pressure switch (optional). When oil volume or pressure is insufficient, the beeper makes sound, send alarm and offers abnormal signal output.
  a、When pressure is insufficient, Erp is displayed.
  b、When liquid level is insufficient, Ero is displayed.
- The system time can be configured, LUB lubricating time: 1−999 (seconds)
  INT intermittent time: 1−999 (minutes) (tailored if specially required)
- The panel indicator displays lubricating and intermittent status.
- The system uses RST key to force lubricating or eliminate abnormal reporting signal.
- Motor continuously operated
- No decompression device is provided with resistance−type system, used with proportional joint distributor (Refer to page 21~23).
- Overflow is provided to protect oil injector and pipeline from being damaged by high pressure.

规格型号及技术参数 Specifications, models and technical parameters

(工作制 S2=5min)
(Work system S2=5min)

项目Item / 型号规格 Models and specifications		电机Motor 电压 voltage (V)	电机Motor 功率 Power (W)	润滑时间 Lubricating time (S)	间歇时间 Intermittent time (M)	额定压力 Rated pressure (MPa)	最大输出压力 Maximum output pressure (MPa)	吐出量 Throughout (cc/min)	出油管径 Outlet oil pipe diameter	压力开关 Pressure Switch	液位开关 Liquid level switch	蜂鸣器 Beeper	油箱容量 Oil tank volume (L)	重量 Weight (KG)
BTB−A1	单相 1−phase	110/220	25	1−999		1.0	3.5	200	Φ 4 or Φ 6	可选配 Optional	有 Yes	有 Yes	3(树脂 Resin)	4.2
								300					4(树脂 Resin)	4.5
	直流 Direct current	DC24	40										4(钣金 Metal plate)	6.4
													6(钣金 Metal plate)	7.0
													8(钣金 Metal plate)	10.0

■ 连续型电动稀油润滑泵 (齿轮泵) Continuous electric thin oil lubricating pump (gear pump)

BTB−A13
(树脂油箱 Resin oil tank)

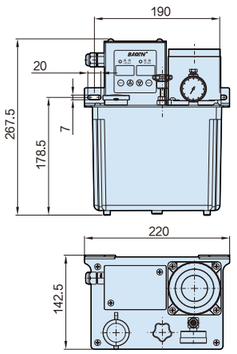

BTB−A14
(树脂油箱 Resin oil tank)

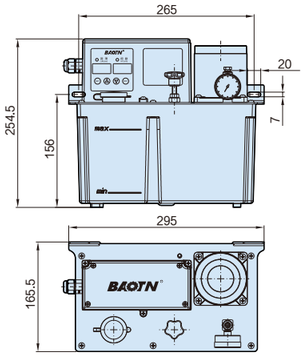

BTB−A14
(钣金油箱 Sheet metal oil tank)

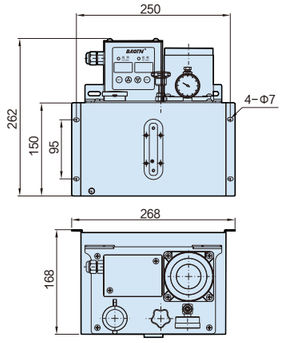

BTB−A16
(钣金油箱 Sheet metal oil tank)

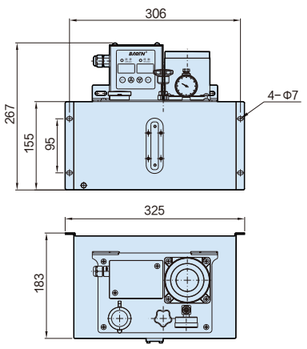

BTB−A18
(钣金油箱 Sheet metal oil tank)

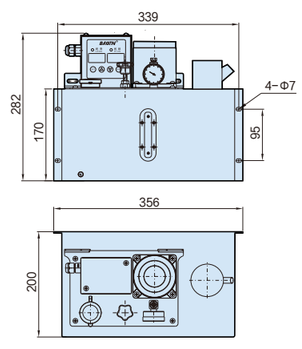

BTB-C1 型(Type)

PLC 控制稀油润滑泵 PLC control thin oil lubricating pump

订货编制说明 Order description

BTB-C1 □ □ – □ □ □ □ □

压力开关 Pressure switch

P	压力开关 Pressure switch
空白 Blank	无 None

油箱容积 Oil tank volume

3	3L
4	4L
6	6L
8	8L

电机类型 Motor type

1	单相 1-phase 110V
2	单相 1-phase 220V
9	DC24V

吐出量 Throughout

2	200cc/min
3	300cc/min

油箱 Oil tank

空白 Blank	树脂油箱 Resin oil tank
A	金属油箱不带回油装置 Metal oil tank without oil return device
H	金属油箱带回油装置 Metal oil tank with oil return device

液位开关 Liquid level switch

D	上通电 Upper power supply
空白 Blank	下通电 Lower power supply

出油口管径 Outlet pipe diameter

4	接Φ4管 Connected to Φ4pipe
6	接Φ6管 Connected to Φ6pipe

性能与特点

- 设有液位开关、压力开关（可选配）。当油量或压力不足时可将异常信号输出。
- 面板指示灯可显示出注油机的通电和润滑状态。
- 系统中设有"FEED"键，可强制润滑。
- 电机可连续运转。
- 抵抗式系统中无脱压装置，需配合比例接头分配器使用(参考21~23页)。
- 设有溢流阀，可保护注油机及管路由于压力过高而损坏。
- 内部配有保险丝防止短路导致电流过大烧坏IC板和电机。

Performance and characteristics

- Liquid level switch and pressure switch (optional) are provided. When oil volume or pressure is insufficient, abnormal signal is output.
- The panel indicator light indicates power and lubrication status of the oil injection mold.
- The system is provided with FEED key, and compulsory lubrication is applied.
- Motor continuously operated
- No decompression device is provided with resistance-type system, used with proportional joint distributor (Refer to page 21~23).
- Overflow valve is provided to prevent damage by oil injector and pipeline.
- Internal fuse is provided to prevent IC board and motor damaged by short circuit.

规格型号及技术参数 Specifications, models and technical parameters

(工作制 S2=5min)
(Work system S2=5min)

型号规格 Models and specifications / 项目Item		电机Motor 电压 voltage (V)	电机Motor 功率 Power (W)	润滑时间 Lubricating time (S)	间歇时间 Intermittent time (M)	额定压力 Rated pressure (MPa)	最大输出压力 Maximum output pressure (MPa)	吐出量 Throughout (cc/min)	出油管径 Outlet oil pipe diameter	压力开关 Pressure Switch	液位开关 Liquid level switch	蜂鸣器 Beeper	油箱容量 Oil tank volume (L)	重量 Weight (KG)
BTB-C1	单相 1-phase	110/220	25	由外部 PLC 控制 Controlled by an external PLC		1.0	3.5	200 300	Φ 4 or Φ 6	可选配 Optional	上通电或下通电 Power supply at upper or lower position	无 No	3(树脂 Resin)	4.2
													4(树脂 Resin)	4.5
	直流 Direct current	DC24	40										4 (钣金 Metal plate)	6.4
													6 (钣金 Metal plate)	7.0
													8 (钣金 Metal plate)	10.0

■ 连续型电动稀油润滑泵（齿轮泵）Continuous electric thin oil lubricating pump (gear pump)

BTB-C13
(树脂油箱 Resin oil tank)

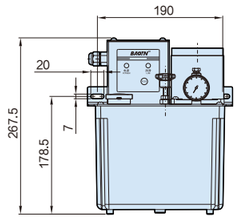

BTB-C14
(树脂油箱 Resin oil tank)

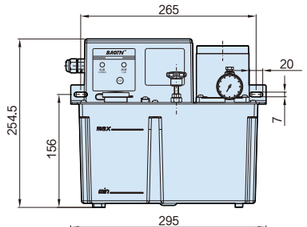

BTB-C14
(钣金油箱 Sheet metal oil tank)

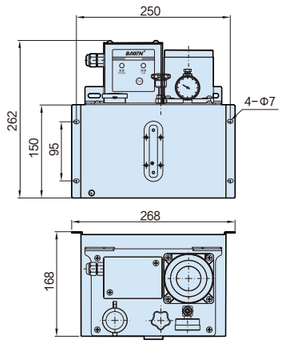

BTB-C16
(钣金油箱 Sheet metal oil tank)

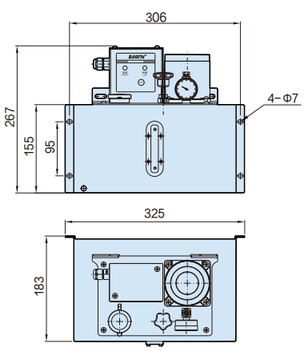
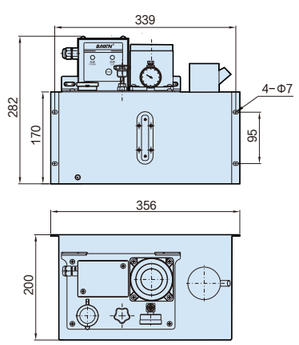
BTB-C18
(钣金油箱 Sheet metal oil tank)